UNIVERSITY OF CAMBRIDGE INTERNATIONAL EXAMINATIONS
General Certificate of Education
Advanced Subsidiary Level and Advanced Level

| | | | | | | | | | |
|---|---|---|---|---|---|---|---|---|---|
| CANDIDATE NAME | | | | | | | | | |
| CENTRE NUMBER | | | | | | CANDIDATE NUMBER | | | | |

*6910565085*

**PHYSICS** **9702/22**

Paper 2 AS Structured Questions **October/November 2010**

**1 hour**

Candidates answer on the Question Paper.

No Additional Materials are required.

**READ THESE INSTRUCTIONS FIRST**

Write your Centre number, candidate number and name on all the work you hand in.
Write in dark blue or black pen.
You may use a soft pencil for any diagrams, graphs or rough working.
Do not use staples, paper clips, highlighters, glue or correction fluid.
DO **NOT** WRITE IN ANY BARCODES.

Answer **all** questions.
You may lose marks if you do not show your working or if you do not use appropriate units.

At the end of the examination, fasten all your work securely together.
The number of marks is given in brackets [ ] at the end of each question or part question.

| For Examiner's Use | |
|---|---|
| 1 | |
| 2 | |
| 3 | |
| 4 | |
| 5 | |
| 6 | |
| 7 | |
| Total | |

This document consists of **17** printed pages and **3** blank pages.


© UCLES 2010

**Data**

| | |
|---|---|
| speed of light in free space, | $c = 3.00 \times 10^{8}\ \text{m s}^{-1}$ |
| permeability of free space, | $\mu_0 = 4\pi \times 10^{-7}\ \text{H m}^{-1}$ |
| permittivity of free space, | $\varepsilon_0 = 8.85 \times 10^{-12}\ \text{F m}^{-1}$ |
| elementary charge, | $e = 1.60 \times 10^{-19}\ \text{C}$ |
| the Planck constant, | $h = 6.63 \times 10^{-34}\ \text{J s}$ |
| unified atomic mass constant, | $u = 1.66 \times 10^{-27}\ \text{kg}$ |
| rest mass of electron, | $m_e = 9.11 \times 10^{-31}\ \text{kg}$ |
| rest mass of proton, | $m_p = 1.67 \times 10^{-27}\ \text{kg}$ |
| molar gas constant, | $R = 8.31\ \text{J K}^{-1}\ \text{mol}^{-1}$ |
| the Avogadro constant, | $N_A = 6.02 \times 10^{23}\ \text{mol}^{-1}$ |
| the Boltzmann constant, | $k = 1.38 \times 10^{-23}\ \text{J K}^{-1}$ |
| gravitational constant, | $G = 6.67 \times 10^{-11}\ \text{N m}^2\ \text{kg}^{-2}$ |
| acceleration of free fall, | $g = 9.81\ \text{m s}^{-2}$ |

© UCLES 2010

**Formulae**

uniformly accelerated motion, $s = ut + \frac{1}{2}at^2$
$v^2 = u^2 + 2as$

work done on/by a gas, $W = p\Delta V$

gravitational potential, $\phi = -\frac{Gm}{r}$

hydrostatic pressure, $p = \rho gh$

pressure of an ideal gas, $p = \frac{1}{3}\frac{Nm}{V}\langle c^2 \rangle$

simple harmonic motion, $a = -\omega^2 x$

velocity of particle in s.h.m., $v = v_0 \cos \omega t$
$v = \pm \omega\sqrt{(x_0^2 - x^2)}$

electric potential, $V = \frac{Q}{4\pi\varepsilon_0 r}$

capacitors in series, $1/C = 1/C_1 + 1/C_2 + \ldots$

capacitors in parallel, $C = C_1 + C_2 + \ldots$

energy of charged capacitor, $W = \frac{1}{2}QV$

resistors in series, $R = R_1 + R_2 + \ldots$

resistors in parallel, $1/R = 1/R_1 + 1/R_2 + \ldots$

alternating current/voltage, $x = x_0 \sin \omega t$

radioactive decay, $x = x_0 \exp(-\lambda t)$

decay constant, $\lambda = \frac{0.693}{t_{\frac{1}{2}}}$

© UCLES 2010

**[Turn over**

Answer **all** the questions in the spaces provided.

**1** **(a)** **(i)** Distinguish between vector quantities and scalar quantities.

.....

.....

.....[2]

**(ii)** State whether each of the following is a vector quantity or a scalar quantity.

**1.** temperature

.....[1]

**2.** acceleration of free fall

.....[1]

**3.** electrical resistance

.....[1]

© UCLES 2010

**(b)** A block of wood of weight 25 N is held stationary on a slope by means of a string, as shown in Fig. 1.1.

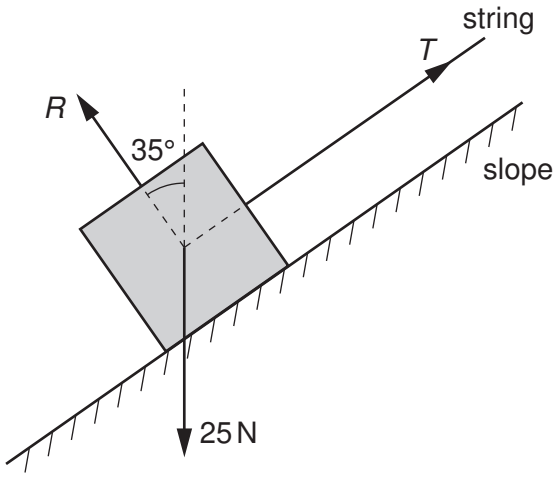


**Fig. 1.1**

The tension in the string is $T$ and the slope pushes on the block with a force $R$ that is normal to the slope.

Either by scale drawing on Fig. 1.1 or by calculation, determine the tension $T$ in the string.

$T$ = ..... N [3]

© UCLES 2010

**2** A ball is thrown from a point P, which is at ground level, as illustrated in Fig. 2.1.

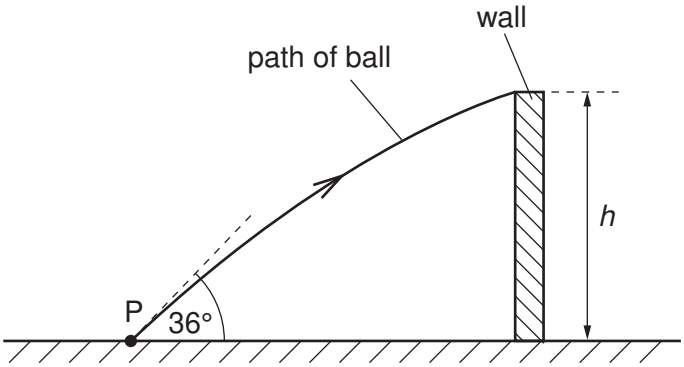


**Fig. 2.1**

The initial velocity of the ball is 12.4 m s$^{-1}$ at an angle of 36° to the horizontal.
The ball just passes over a wall of height *h*. The ball reaches the wall 0.17 s after it has been thrown.

**(a)** Assuming air resistance to be negligible, calculate

**(i)** the horizontal distance of point P from the wall,

distance = ..... m [2]

**(ii)** the height $h$ of the wall.

$h$ = .....m [3]

**(b)** A second ball is thrown from point P with the same velocity as the ball in **(a)**. For this ball, air resistance is not negligible.
This ball hits the wall and rebounds.

On Fig. 2.1, sketch the path of this ball between point P and the point where it first hits the ground. [2]

**3** **(a)** State what is meant by the *centre of gravity* of a body.

.....

.....

.....[2]

**(b)** A uniform rectangular sheet of card of weight *W* is suspended from a wooden rod. The card is held to one side, as shown in Fig. 3.1.

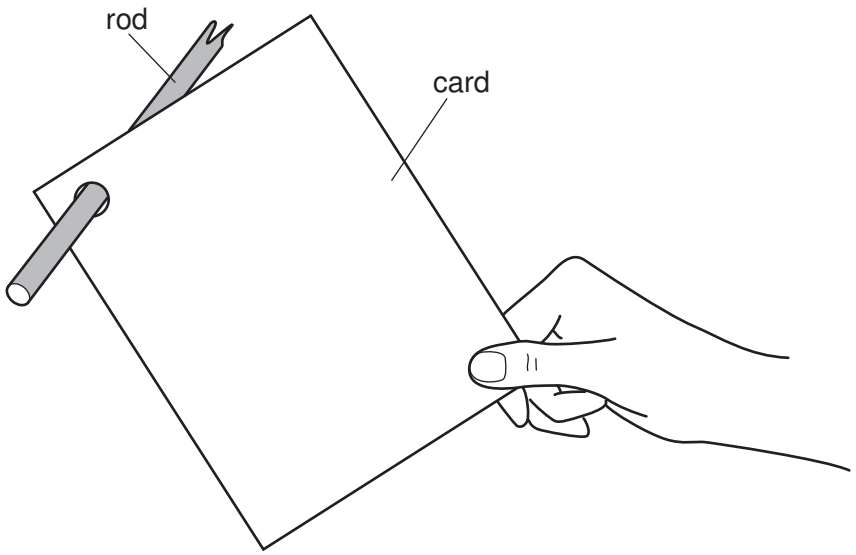


**Fig. 3.1**

On Fig. 3.1,

**(i)** mark, and label with the letter C, the position of the centre of gravity of the card, [1]

**(ii)** mark with an arrow labelled *W* the weight of the card. [1]

**(c)** The card in **(b)** is released. The card swings on the rod and eventually comes to rest.

**(i)** List the two forces, other than its weight and air resistance, that act on the card during the time that it is swinging. State where the forces act.

1. .....

.....

2. .....

.....
[3]

**(ii)** By reference to the completed diagram of Fig. 3.1, state the position in which the card comes to rest.
Explain why the card comes to rest in this position.

.....

.....

.....[2]

**4** **(a)** A metal wire has spring constant $k$. Forces are applied to the ends of the wire to extend it within the limit of Hooke's law.
Show that, for an extension $x$, the strain energy $E$ stored in the wire is given by

$$E = \tfrac{1}{2}kx^2.$$

[4]

**(b)** The wire in **(a)** is now extended beyond its elastic limit. The forces causing the extension are then removed.
The variation with extension $x$ of the tension $F$ in the wire is shown in Fig. 4.1.

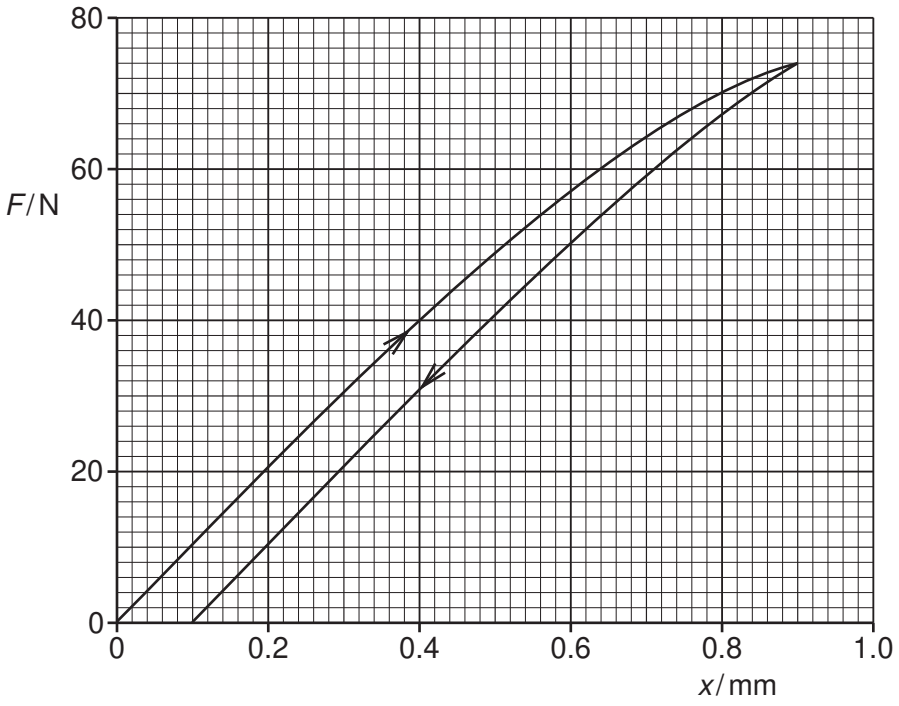


**Fig. 4.1**

Energy $E_S$ is expended to cause a permanent extension of the wire.

**(i)** On Fig. 4.1, shade the area that represents the energy $E_S$. [1]

© UCLES 2010

**(ii)** Use Fig. 4.1 to calculate the energy $E_S$.

$E_S$ = ..... mJ [3]

**(iii)** Suggest the change in the structure of the wire that is caused by the energy $E_S$.

.....

.....[1]

**5** A student is studying a water wave in which all the wavefronts are parallel to one another. The variation with time $t$ of the displacement $x$ of a particular particle in the wave is shown in Fig. 5.1.

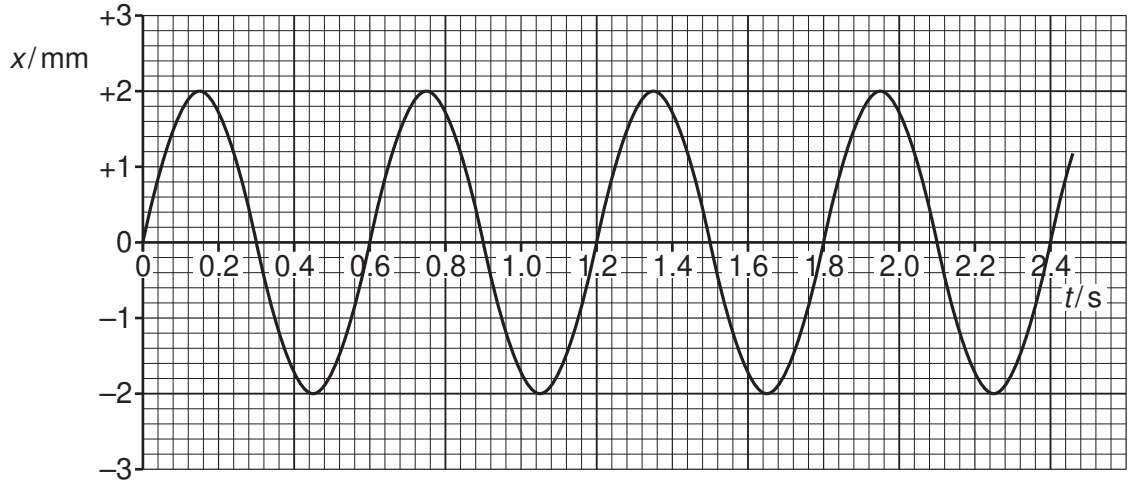


**Fig. 5.1**

The distance $d$ of the oscillating particles from the source of the waves is measured. At a particular time, the variation of the displacement $x$ with this distance $d$ is shown in Fig. 5.2.

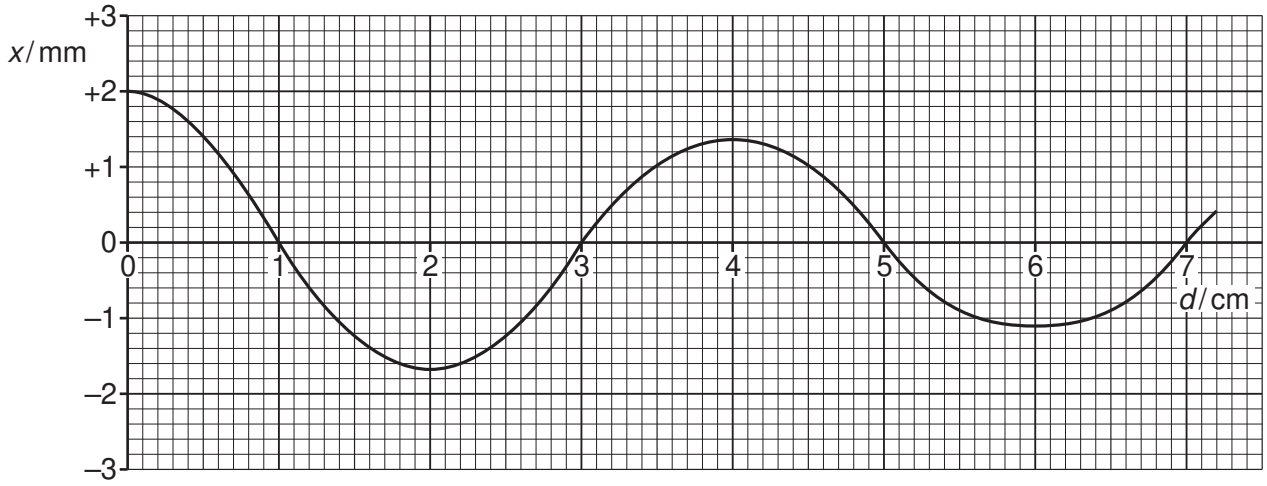


**Fig. 5.2**

**(a)** Define, for a wave, what is meant by

**(i)** *displacement*,

.....

.....[1]

**(ii)** *wavelength*.

.....

.....[1]

© UCLES 2010

**(b)** Use Figs. 5.1 and 5.2 to determine, for the water wave,

**(i)** the period $T$ of vibration,

$T$ = ..... s [1]

**(ii)** the wavelength $\lambda$,

$\lambda$ = ..... cm [1]

**(iii)** the speed $v$.

$v$ = ..... cm s$^{-1}$ [2]

**(c)** **(i)** Use Figs. 5.1 and 5.2 to state and explain whether the wave is losing power as it moves away from the source.

.....

.....

.....[2]

**(ii)** Determine the ratio

$$\frac{\text{intensity of wave at source}}{\text{intensity of wave 6.0 cm from source}}.$$

ratio = ..... [3]

**6** The variation with temperature of the resistance $R_T$ of a thermistor is shown in Fig. 6.1.

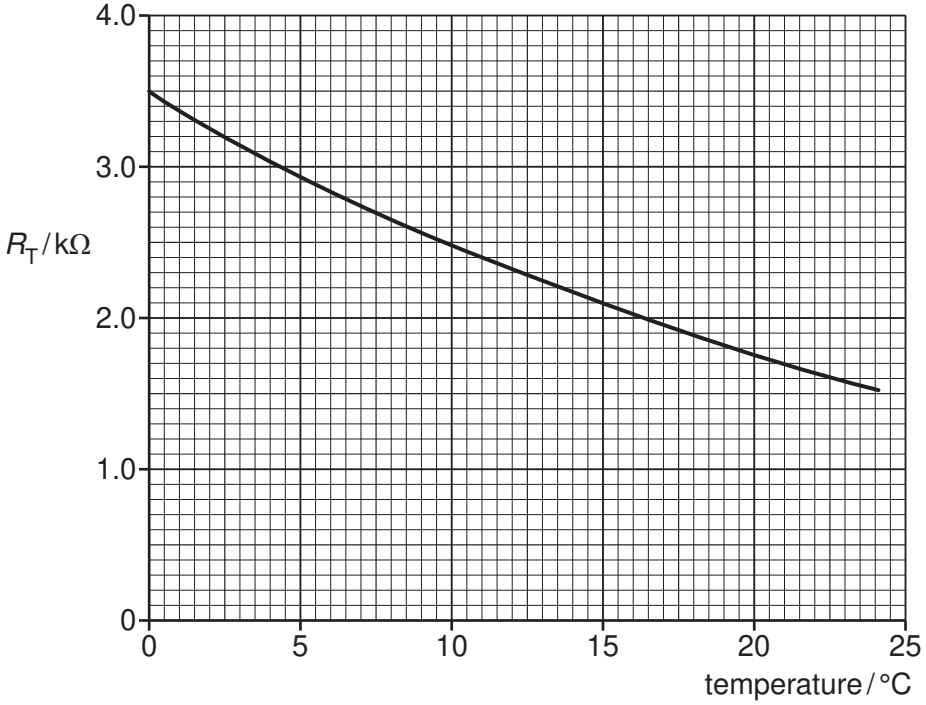


**Fig. 6.1**

The thermistor is connected into the circuit of Fig. 6.2.

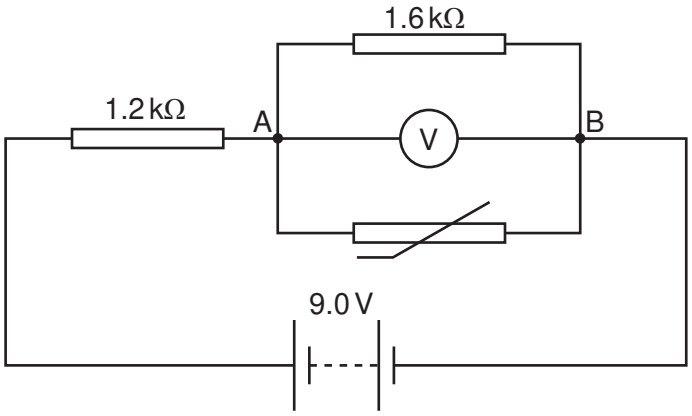


**Fig. 6.2**

© UCLES 2010

The battery has e.m.f. 9.0 V and negligible internal resistance. The voltmeter has infinite resistance.

**(a)** For the thermistor at 22.5 °C, calculate

**(i)** the total resistance between points A and B on Fig. 6.2,

resistance = ..... Ω [2]

**(ii)** the reading on the voltmeter.

voltmeter reading = .....V [2]

**(b)** The temperature of the thermistor is changed. The voltmeter now reads 4.0 V. Determine

**(i)** the total resistance between points A and B on Fig. 6.2,

resistance = ..... Ω [2]

**(ii)** the temperature of the thermistor.

temperature = .....°C [2]

**(c)** A student suggests that the voltmeter, reading up to 10V, could be calibrated to measure temperature.

Suggest two disadvantages of using the circuit of Fig. 6.2 with this voltmeter for the measurement of temperature in the range 0°C to 25°C.

1. .....

.....

2. .....

.....
[2]

**7** The results of the $\alpha$-particle scattering experiment provided evidence for the existence and small size of the nucleus.

**(a)** State the result that provided evidence for

**(i)** the small size of the nucleus, compared with the atom,

.....

.....

.....[2]

**(ii)** the nucleus being charged and containing the majority of the mass of the atom.

.....

.....

.....[2]

**(b)** The $\alpha$-particles in this experiment originated from the decay of a radioactive nuclide. Suggest two reasons why $\beta$-particles from a radioactive source would be inappropriate for this type of scattering experiment.

1. .....

.....

2. .....

.....
[2]

© UCLES 2010

**BLANK PAGE**

© UCLES 2010

**BLANK PAGE**

**BLANK PAGE**

Permission to reproduce items where third-party owned material protected by copyright is included has been sought and cleared where possible. Every reasonable effort has been made by the publisher (UCLES) to trace copyright holders, but if any items requiring clearance have unwittingly been included, the publisher will be pleased to make amends at the earliest possible opportunity.

University of Cambridge International Examinations is part of the Cambridge Assessment Group. Cambridge Assessment is the brand name of University of Cambridge Local Examinations Syndicate (UCLES), which is itself a department of the University of Cambridge.

© UCLES 2010